BOMBAY

1870608
Morgan Day Bed-Antique White
Parts and Hardware List

A.	Headboard	1 pc
B.	Footboard	1 pc
C.	Side Board	1 pc
D.	Side Rail	1 pc
E.	Support Slats	12 pcs
F.	Connecting Plate	2 pcs
G.	Long Phillips Head Screws	30 pcs
H.	Short Phillips Head Screws	14 pcs
I.	Phillips Head Screwdriver	1 pc

* Please make sure that you have all the parts and hardware indicated above before you begin assembly of this item.
* Use the hardware illustrations to determine correct piece and size.
* This item should be assembled on a soft surface to prevent scratching the finish during assembly.
* This item may require periodic tightening.
* This item is to be assembled by an adult and is not intended to be taken apart by a child.

Hardware Illustrations

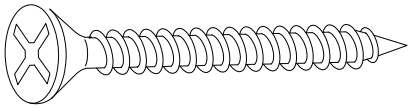

G. Long Phillips Head Screw

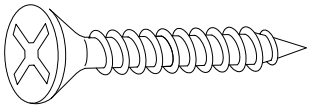

H. Short Phillips Head Screw

1870608
Morgan Day Bed-Antique White

Assemble the Headboard & Footboard

Parts required

A.	Headboard	1 pc	G.	Long Phillips Head Screws	6 pcs
B.	Footboard	1 pc	H.	Short Phillips Head Screws	6 pcs
C.	Side Board	1 pc	I.	Phillips Head Screwdriver	1 pc
D.	Side Rail	1 pc			

1. **Attach the Headboard (A)&Footboard (B).** Insert the exposed hooks of the Side Board (C) and Side Rail (D) into the slots of the Headboard (A) and Footboard (B). Press the Side Board (C) and Side Rail (D) downwards onto the pins in the Headboard (A) and Footboard (B). (Note: Make sure that the hook is all the way down onto the pins.) Secure the plates at ends of Side Rail (D) to the Footboard (B) and Headboard (A) with Short Phillips Head Screws (H) using Phillips Head Screwdriver(I). See Illustration #1.
2. **Secure the Side Board (C)** Align the pre-drilled holes in the Side Board with pre-drilled holes in the Headboard (A) and Footboard (B). Secure with Long Phillips Head Screws (G) using Phillips Head Screwdriver (I). See Illustration #1.

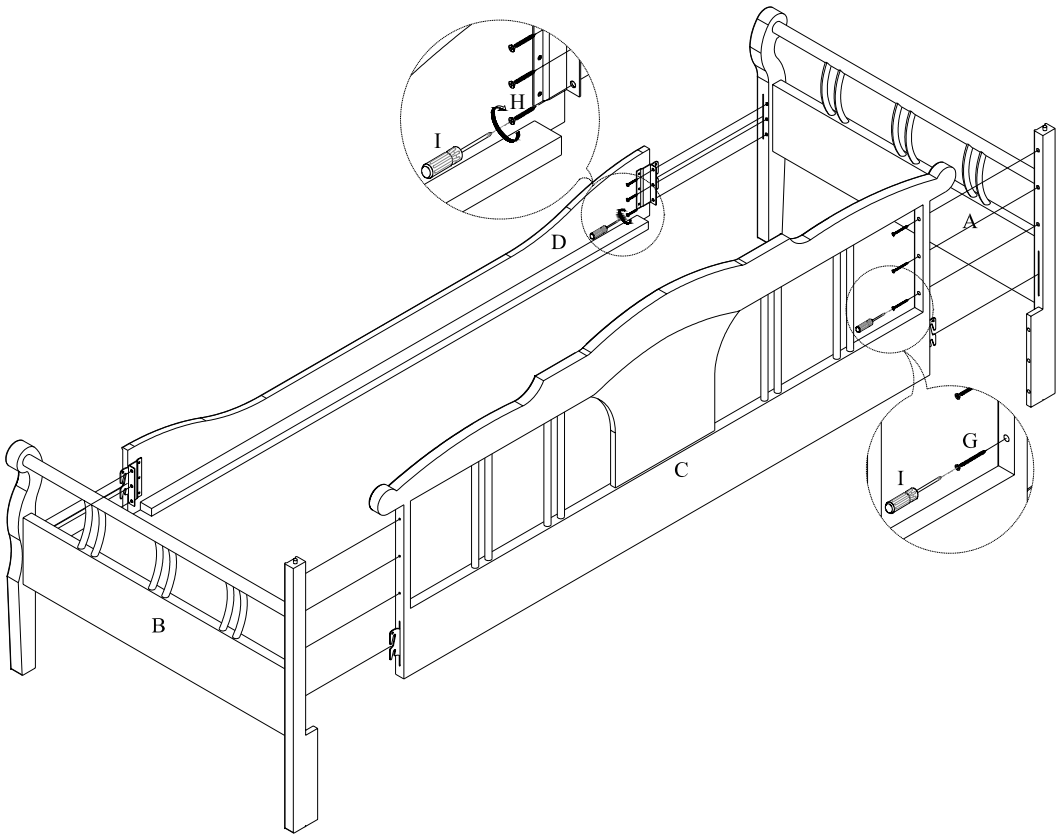

Illustration # 1

1870608
Morgan Day Bed-Antique White

Attach the Support Slats & Connecting Plates

Parts required

C.	Side Board	1 pc	G.	Long Phillips Head Screws	24 pcs
D.	Side Rail	1 pc	H.	Short Phillips Head Screws	8 pcs
E.	Support Slats	12 pcs	I.	Phillips Head Screwdriver	1 pc
F.	Connecting Plates	2 pcs			

3. **Attach the Support Slats (E).** Place the Support Slats (E) over the cleat rails of Side Rail (D) and Side Board (C). Secure both sides of each Support Slat (E) with Long Phillips Head Screws (G) using Phillips Head Screwdriver (I). See Illustration #2.
4. **Attach the Connecting Plates (F)** Align the pre-drilled holes of the Connecting Plates with the pre-drilled holes in the Side Board (C) and adjoining Headboard (A) and Footboard (B). Secure with Short Phillips Head Screws (H) using Phillips Head Screwdriver (I). See Illustration #2.

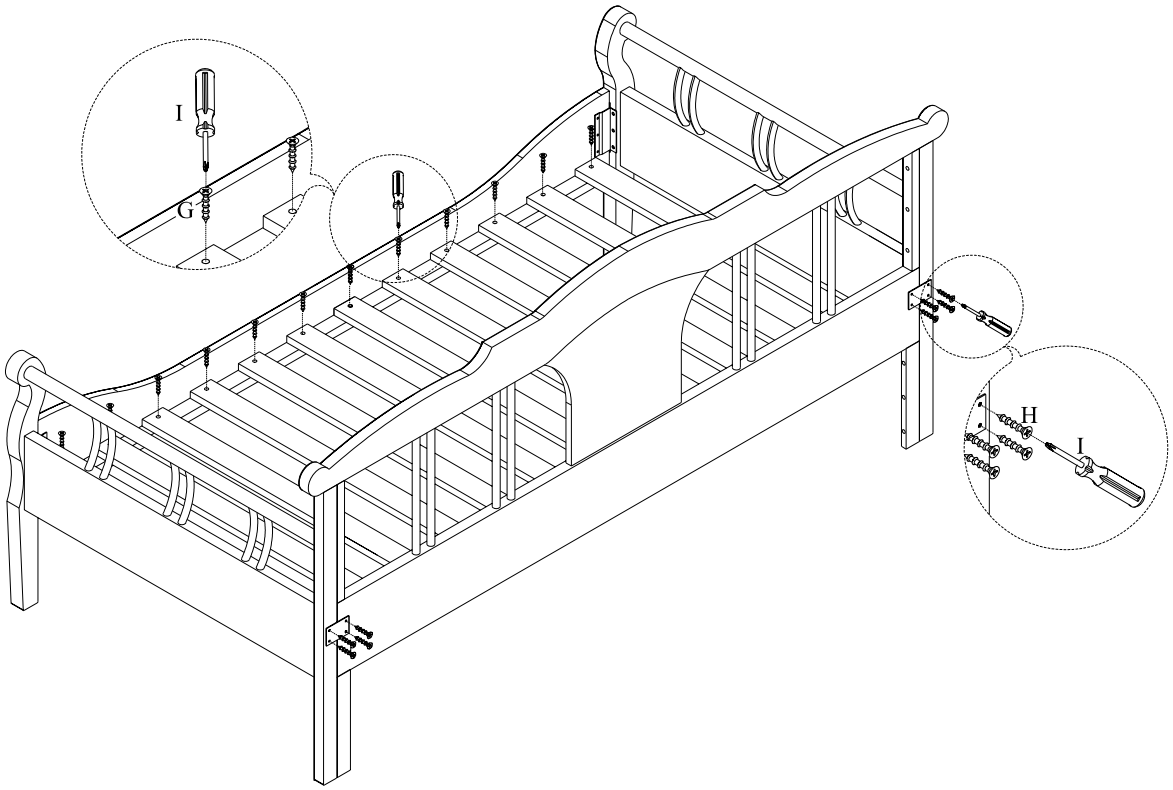

Illustration # 2